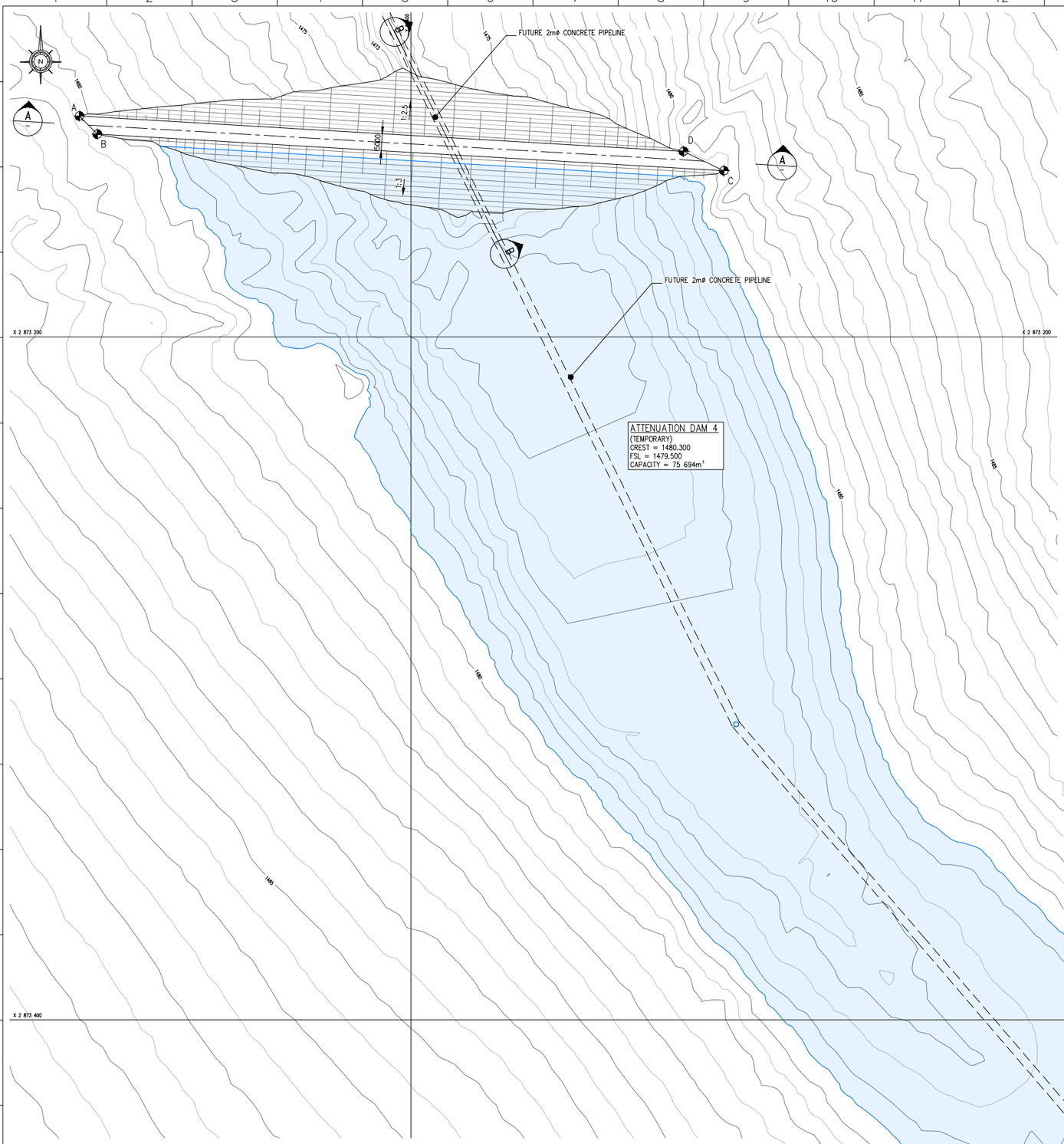

PLAN
1:500

LIST OF COORDINATES ATTENUATION DAM 4			
POINT	Y	X 2800000.000	Z
A	8497.105	73135.329	1480.300
B	8491.874	73140.643	1480.300
C	8308.281	73151.372	1480.300
D	8320.145	73145.670	1480.300

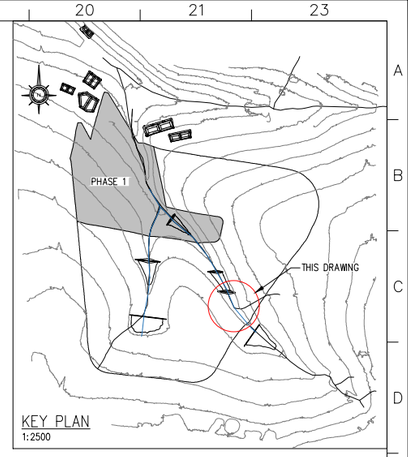

KEY PLAN
1:2500

NOTE
ALL LEVELS & DIMENSIONS TO BE VERIFIED ON SITE BEFORE ANY WORK COMMENCES. ANY DISCREPANCIES TO BE REPORTED TO THE ENGINEER.

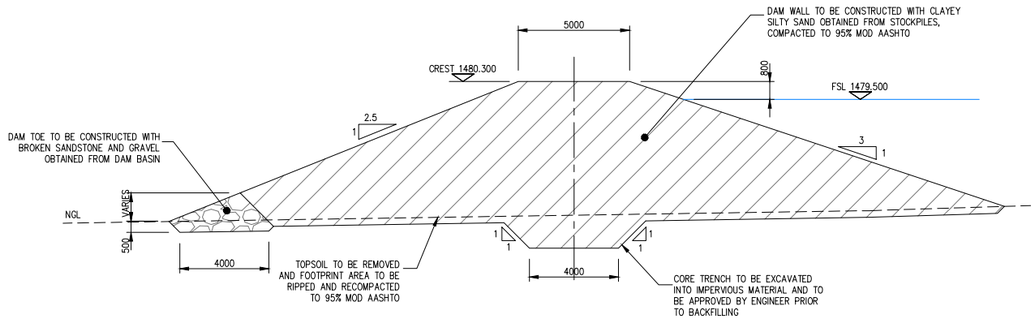

TYPICAL SECTION THROUGH WALL
SCALE 1:100

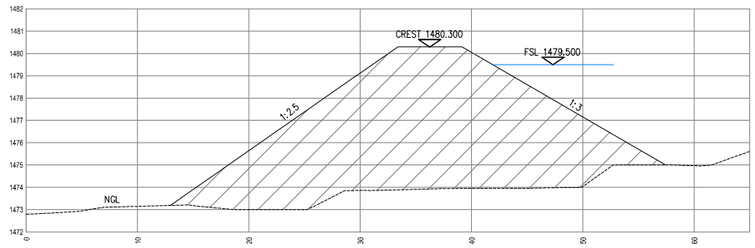

SECTION B
SCALE HOR 1:200
VERT 1:100

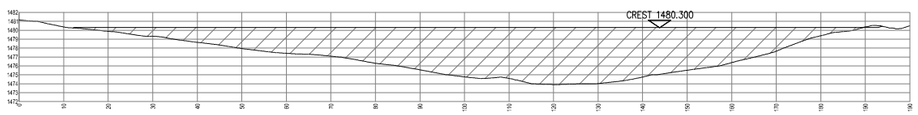

SECTION A
SCALE HOR 1:500
VERT 1:250

EMBANKMENTS AND EXCAVATION DETAILS

D.O.	REV	DATE	INDEX REFERENCE :					REFERENCE DWG. No.	REFERENCE DRAWINGS
.	0	2023-11-27	ISSUED FOR CONSTRUCTION	RS	MM	KPM			
.	B	2023-11-24	ISSUED FOR EXTERNAL REVIEW	RS	MM	KPM			
.	A	2023.11.08	ISSUED FOR INTERNAL REVIEW	MM	BLJ	KPM			
				REV BY	CHKD BY	AUTH BY	KKS APP		

60YR ADF SCOPE LEGEND

NAME | LABEL

KKS PBS: 00UEQ01

ASH DISPOSAL FACILITY

NOTES:
COORDINATE SYSTEM : LO29 WGS-84

Sign:
K.P.MATULOVICH
Pr. Eng. 20190729
Date: 30-11-2023

DRD REFERENCE	–	–	PROFESSIONAL ENGINEER FOR ESKOM BY	DATE
DESIGN APPROVED	27 11 23	KPM	–	–
			SUPERVISOR FOR ESKOM BY	DATE
KKS APP	–		–	–
AUTH BY	–		ESKOM HOLDINGS LTD. REG. No. 2002/015627/06	
CHKD BY	24 11 23	MM		
DRAWN BY	02 11 23	RS		
SCALE	1:500			

Eskom

KUSILE POWER STATION
ASH DISPOSAL FACILITY
ATTENUATION DAM 4
LAYOUT AND SETTING-OUT DATA

366-511922 | SHEET 1 | REV 0

SIZE ORDOTTE A0L

C:\Users\Molly.ENVITECHJHB\Envitech Solutions PTY-LTD\Communication site - Documents\Johannesburg\Projects\ES projects\816-2023 EPCM - Eskom 60yr ADF\3. Project Stage\Design Drawings\Rita_all_231122\366-511922.dwg Dec 06, 2023 - 7:06am