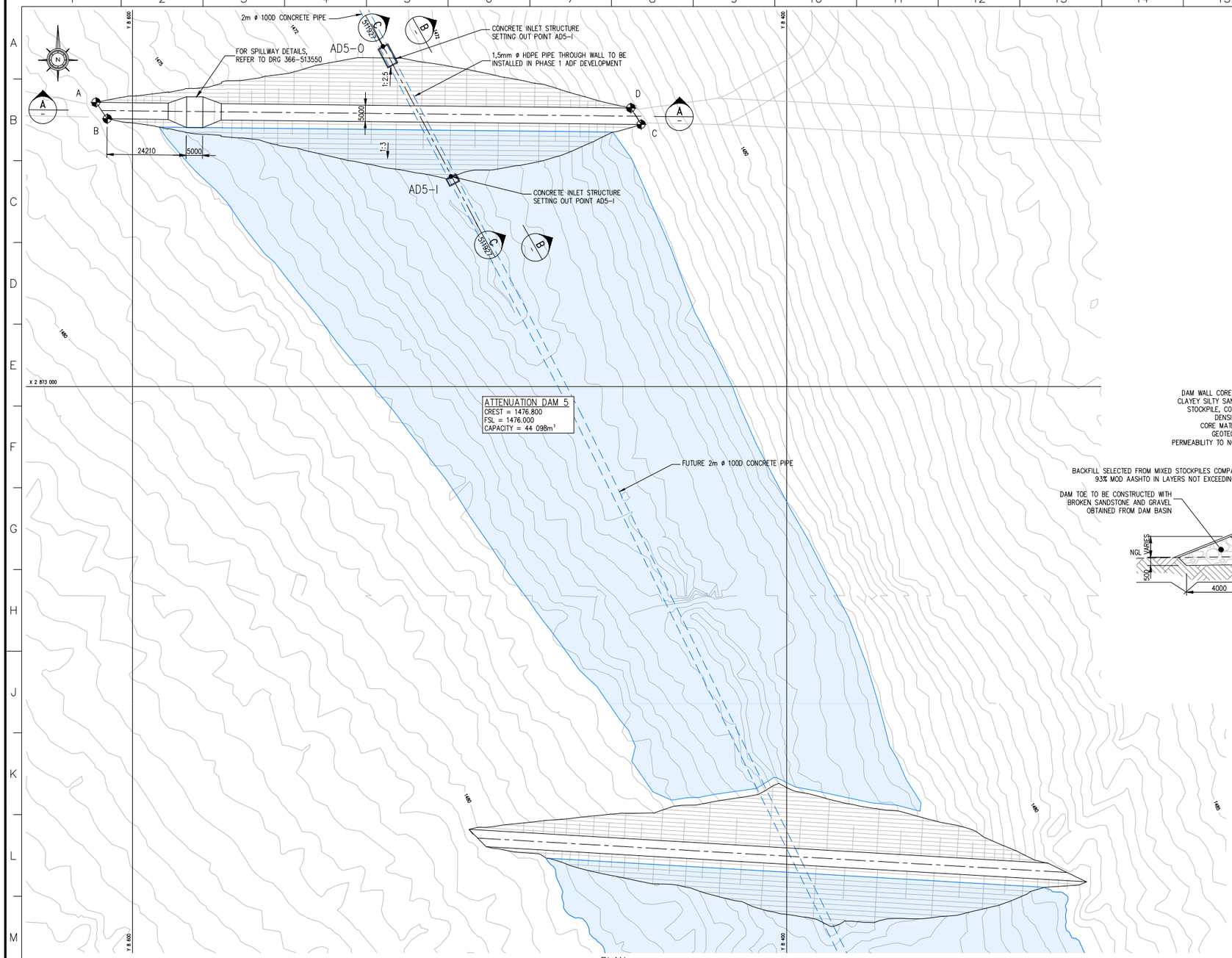

PLAN
1:500

LIST OF COORDINATES ATTENUATION DAM 5			
POINT	Y	X 2800000.000	Z
A	8611.140	72913.148	1476.800
B	8607.686	72918.185	1476.800
C	8444.471	72919.921	1476.800
D	8447.611	72914.886	1476.800
AD5–I	8502.618	72935.835	
AD5–O	8523.407	72896.102	

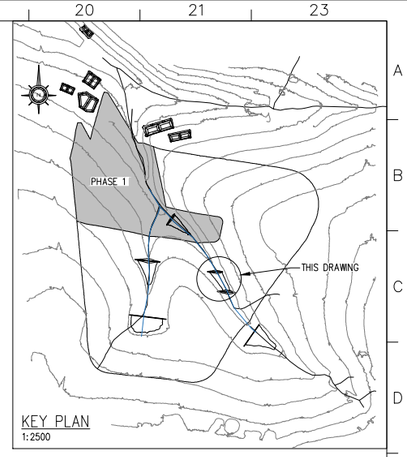

KEY PLAN
1:2500

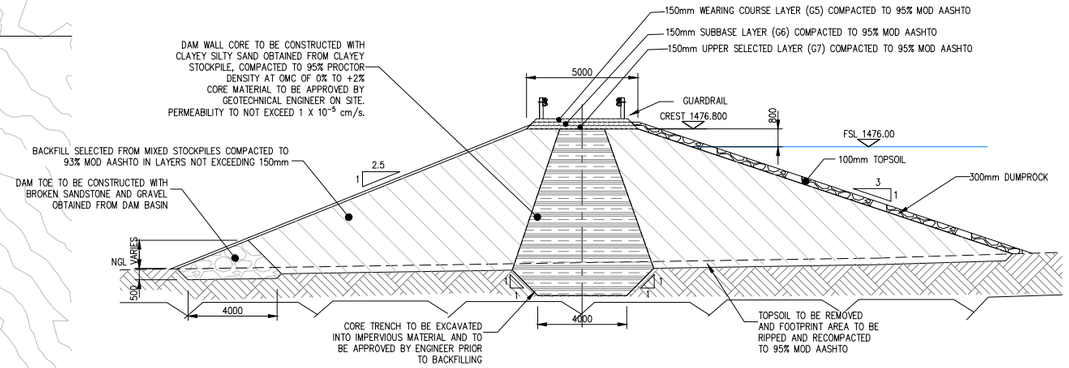

TYPICAL SECTION THROUGH WALL
SCALE 1:100

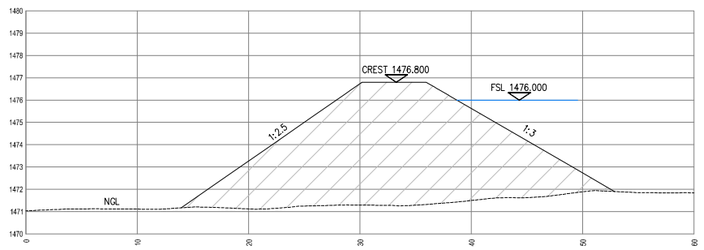

SECTION B
SCALE HOR 1:200
VERT 1:100

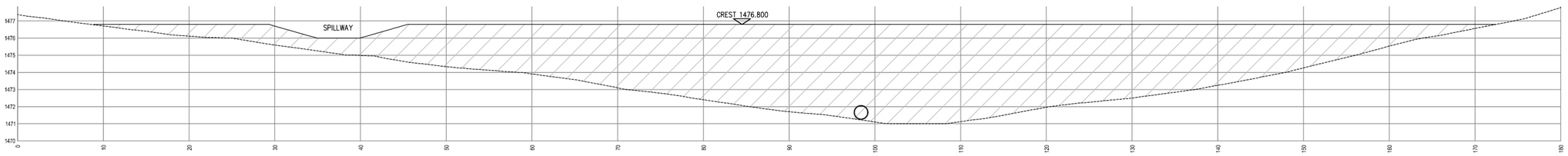

SECTION A
SCALE HOR 1:200
VERT 1:100

EMBANKMENTS AND EXCAVATION DETAILS

REV	DATE	INDEX REFERENCE :	REV BY	CHKD BY	AUTH BY	KKS APP	REFERENCE DWG. No.	REFERENCE DRAWINGS
. 0.1	2024.02.13	ISSUED FOR CONSTRUCTION	MM	BLJ	KPM			
. 0	2023.11.27	ISSUED FOR CONSTRUCTION	MM	BLJ	KPM			
. B	2023.11.24	ISSUED FOR EXTERNAL REVIEW	MM	BLJ	KPM			
. A	2023.11.08	ISSUED FOR INTERNAL REVIEW	MM	BLJ	KPM			

D.O.			AUTHORISED FOR ESKOM BY	DATE
DRG REGISTERED		–	–	–
DESIGN APPROVED	27 11 23	KPM	AUTHORISED FOR ESKOM BY	DATE
RES. APP		–	–	–
AUTH BY		–	ESKOM HOLDINGS LTD. REG. No. 2002/015527/06	
CHKD BY	24 11 23	MM		
DRAWN BY	02 11 23	RS		
SCALE		1:500		

60YR ADF SCOPE LEGEND | KKS | PBS: 00UEQ01
NAME | LABEL | ASH DISPOSAL FACILITY

NOTES:
COORDINATE SYSTEM : LO29 WGS–84

Sign: .....
K.P.MATULOVICH
Pr. Eng. 20190729
Date: 25-02-2024

Eskom

KUSILE POWER STATION
ASH DISPOSAL FACILITY
ATTENUATION DAM 5
LAYOUT AND SETTING-OUT DATA

366–511923 | SHEET 1 | REV 0.1

SIZE GROOTTE A0L

C:\Users\Molly.ENVITECHJHB\Envitech Solutions PTY-LTD\Communication site – Documents\Johannesburg\Projects\ES projects\816-2023 EPCM – Eskom 60yr ADF\3. Project Stage\Design Drawings\Rita_sil_2311122\366-511923.dwg Feb 21, 2024 – 2:35pm